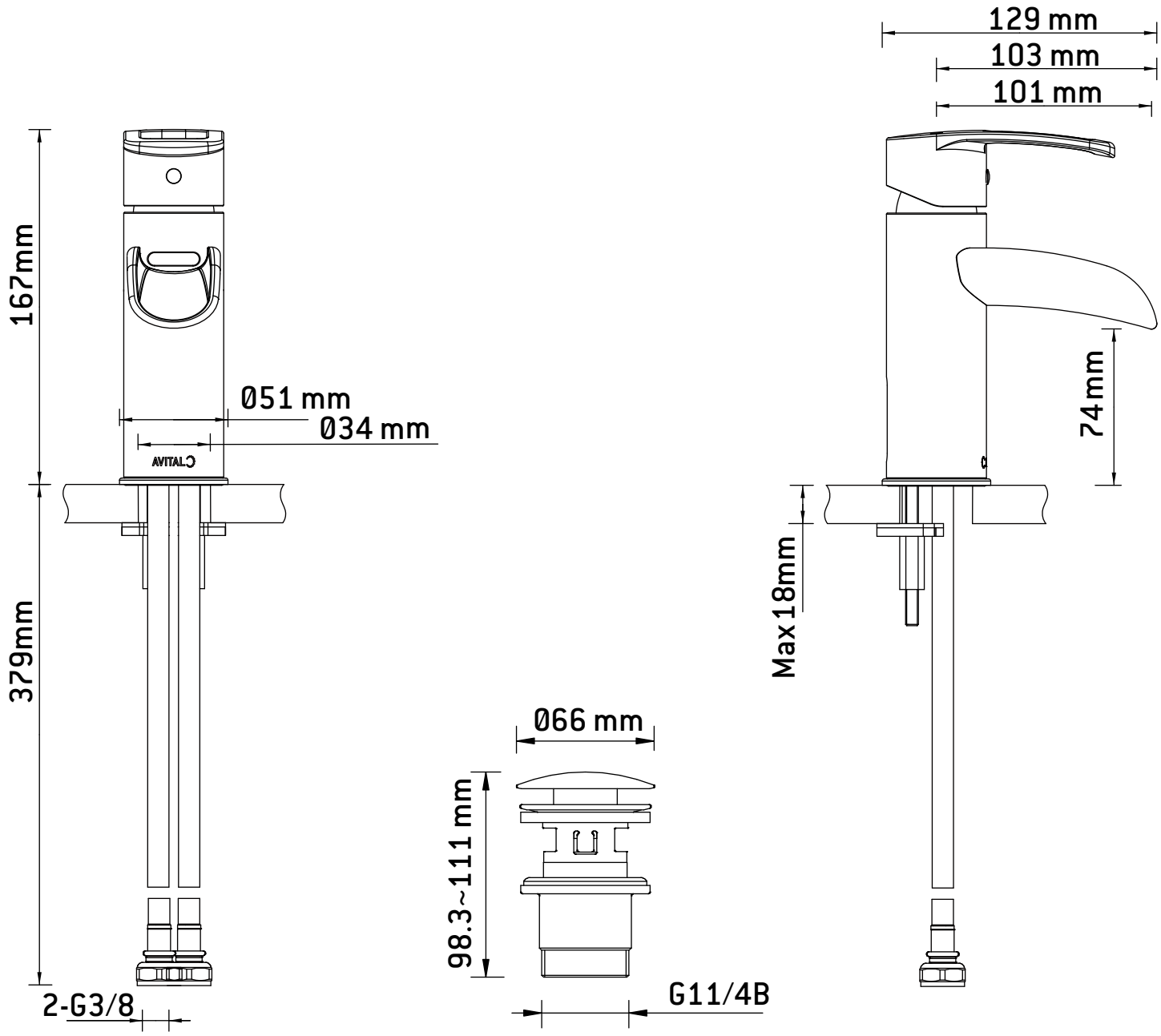
129 mm
103 mm
101 mm
167mm
Ø51 mm
Ø34 mm
AVITALY
74mm
379mm
Max18mm
Ø66 mm
98.3~111 mm
2-G3/8
G11/4B